# Ultra-Low Noise Amplifier for Global Navigation Satellite Systems (GNSS)

## FEATURES

- Reduce RF environment Interference with patented Smart-Linearity-Technology (SLT);
- Ultra low current=7.8mA;
- Ultra low noise figure(NF)=0.75dB;
- High power gain=18.9dB;
- High input 1dB-compression point=-10.5dBm;
- GPS L1 requires only one input matching inductor;
- RF output internally matched to 50 ohm for GPS L1;
- Supply voltage: 1.5V to 3.3V;
- Operating frequencies: 1550~1615MHz; 1164~1215MHz;
- DFN 1.1 mmX0.9 mmX0.45 mm-6L package
- ±3kV HBM ESD protection (including RFIN and RFOUT pin)

## APPLICATIONS

- Smart Phones, Feature Phones;
- Tablet PCs;
- Personal Navigation Devices;
- Digital Still Cameras, Digital Video Cameras;
- RF Front End modules;
- Complete GPS chipset modules;
- Theft protection(laptop, ATM);

## GENERAL DESCRIPTION

The AW15245DNR is a Low Noise Amplifier designed for Global Navigation Satellite Systems (GNSS) as GPS, Beidou, GLONASS, Galileo and Compass. With on-chip DC blocking capacitors at RFIN and RFOUT, The AW15245DNR can be close to the antenna, requires only one external input matching inductor for GPS L1, and reduces assembly complexity and the PCB area, enabling a cost-effective solution.

The AW15245DNR with patented Smart Linearity Technology (SLT) achieves ultra-low noise figure, high linearity, high gain, over a wide range of supply voltages from 1.5V up to 3.3V. All these features make AW15245DNR an excellent choice for GNSS LNA as it improves sensitivity with low noise figure and high gain, provide better immunity against out-of-band jammer signals with high linearity, reduces filtering requirement of preceding stage and hence reduces the overall cost of the GNSS receiver.

The AW15245DNR is available in a small lead-free, RoHS-Compliant, DFN 1.1 mm X 0.9 mm X 0.45 mm-6L package.

awinic Confidential

 Copyright © 2022 SHANGHAI AWINIC TECHNOLOGY CO., LTD

# TYPICAL APPLICATION CIRCUIT

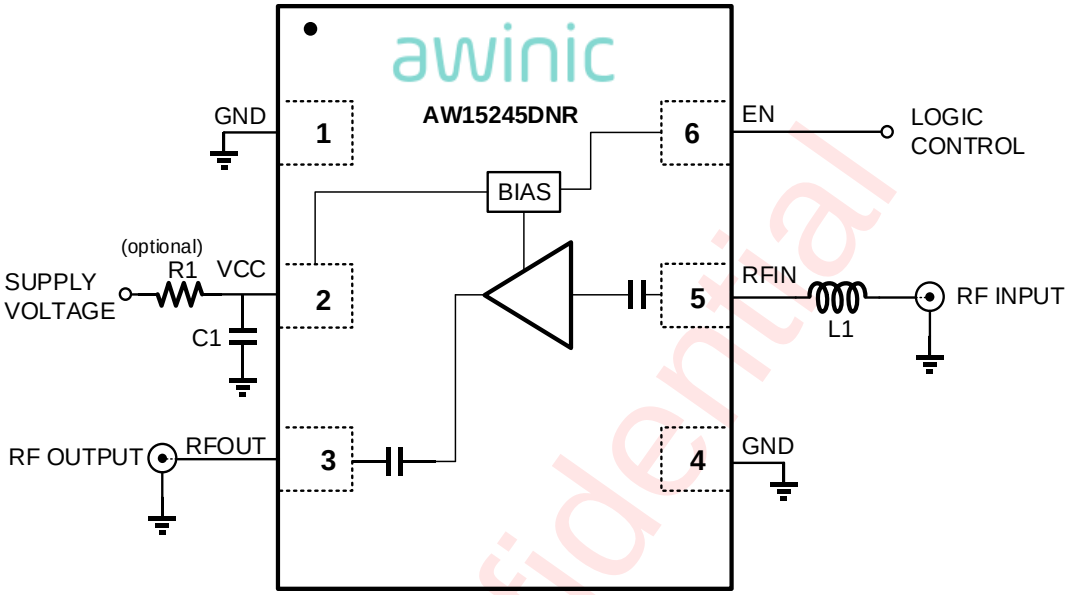


L1, C1, R1 Closed to LNA

**Figure 1(a) Typical Application Circuit of AW15245DNR for GPS L1**

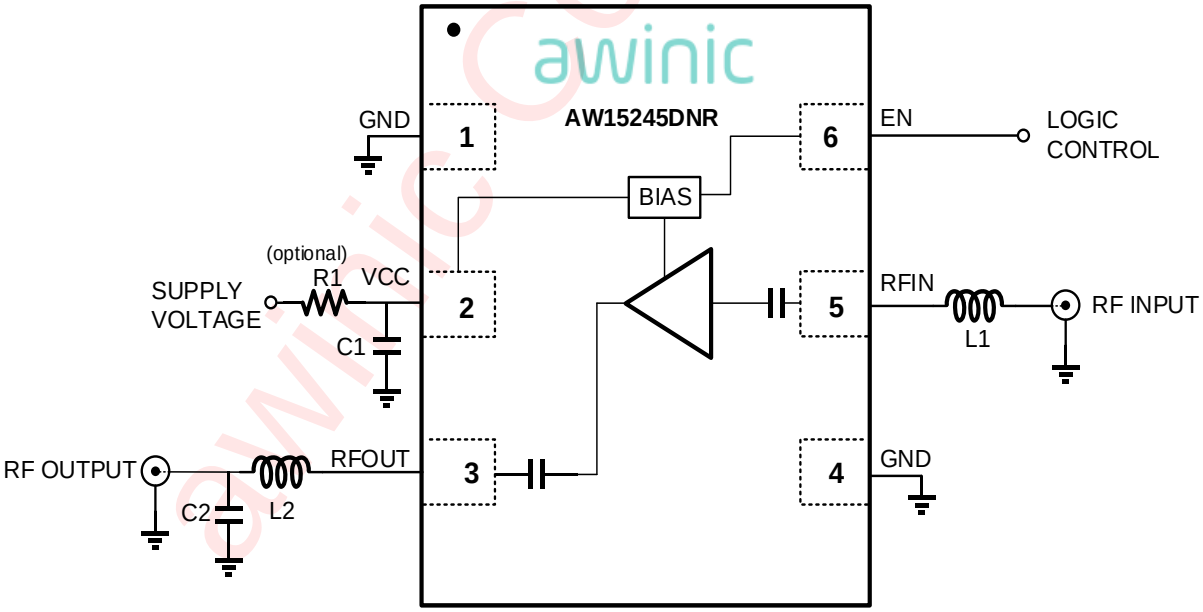


L1, L2, C1, C2, R1 Closed to LNA

**Figure 1(b) Typical Application Circuit of AW15245DNR for GPS L5**

awinic Confidential

 Copyright © 2022 SHANGHAI AWINIC TECHNOLOGY CO., LTD

## RECOMMENDED COMPONENTS LIST

Table1 and talble2 list the recommended inductor types and values; Table 3 lists the recommended capacitor types and values.

Table1: list of inductor for GPS L1

| Component | Part Number | Inductance | Q(min) | Q Test Frequency | Supplier | Size |
|---|---|---|---|---|---|---|
| | Units | nH | | MHz | | |
| L1 | LQW15A | 10 | 25 | 250 | Murata | 0402 |
| L1 | SDWL1005C | 10 | 24 | 250 | Sunlord | 0402 |

Table2: list of inductor for GPS L5

| Component | Part Number | Inductance | Q(min) | Q Test Frequency | Supplier | Size |
|---|---|---|---|---|---|---|
| | Units | nH | | MHz | | |
| L1 | LQW15A | 16 | 25 | 250 | Murata | 0402 |
| L2 | LQW15A | 8.7 | 25 | 250 | Murata | 0402 |

Table2: list of capacitor

| Component | Part Number | Capacitance | Rated Voltage | Supplier | Size |
|---|---|---|---|---|---|
| | Units | pF | V | | |
| C1 | GRM155 | 1000 | 50 | Murata | 0402 |
| C2 | GRM155 | 1.5 | 50 | Murata | 0402 |

## PIN CONFIGURATION AND TOP MARK

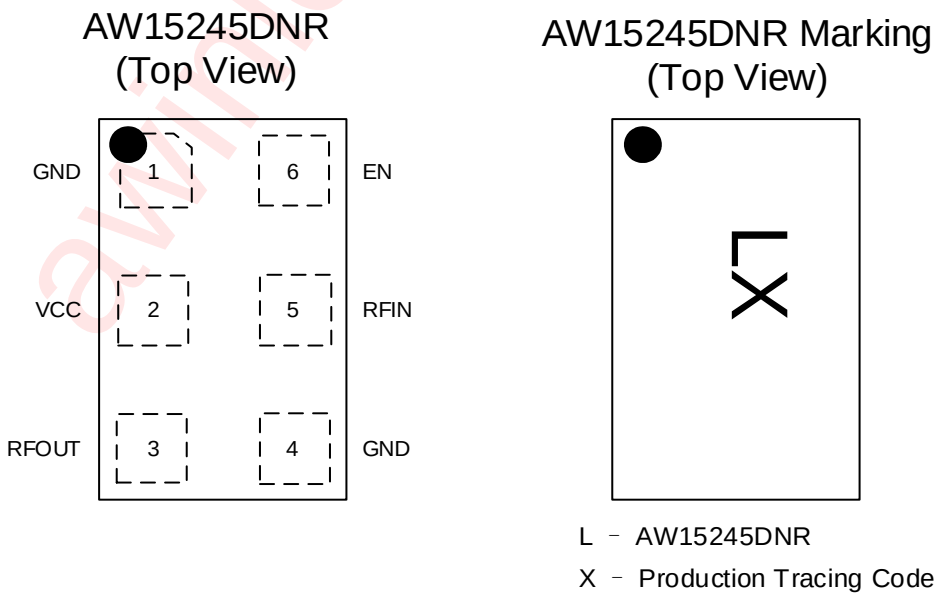


**Figure 2 Pin Configuration and Top Mark**

awinic Confidential

 Copyright © 2022 SHANGHAI AWINIC TECHNOLOGY CO., LTD

## PIN DEFINITION

| No. | NAME | DESCRIPTION |
|---|---|---|
| 1 | GND | Ground |
| 2 | VCC | DC Supply |
| 3 | RFOUT | LNA output |
| 4 | GND | Ground |
| 5 | RFIN | LNA input |
| 6 | EN | Logic control |

awinic Confidential

 Copyright © 2022 SHANGHAI AWINIC TECHNOLOGY CO., LTD

## FUNCTIONAL BLOCK DIAGRAM

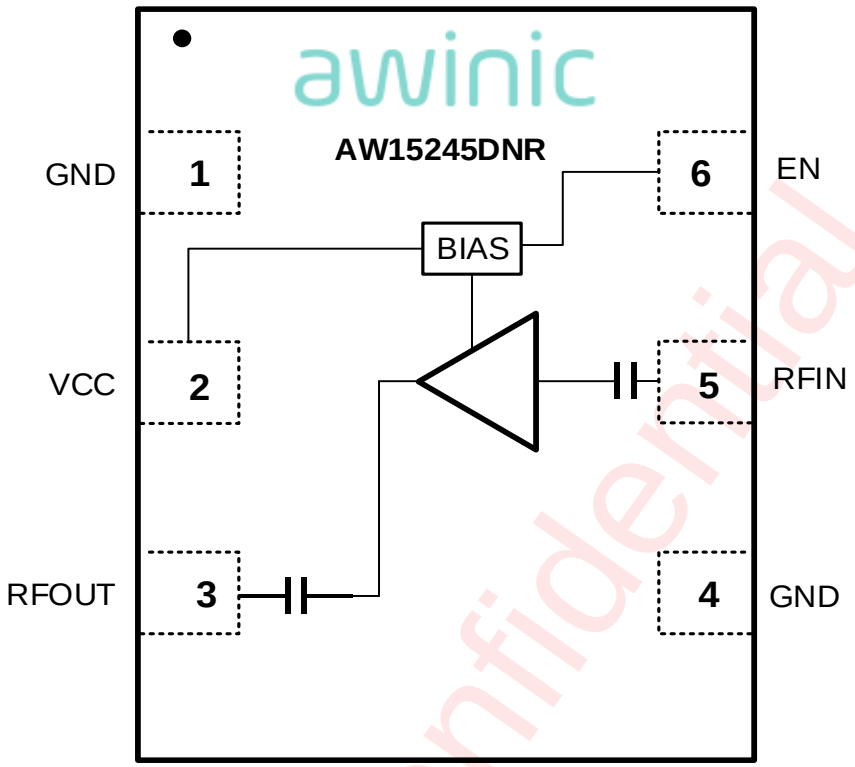


**Figure 3 Functional Block Diagram**

## ORDERING INFORMATION

| Part Number | Temperature | Package | Marking | Moisture Sensitivity Level | Environmental Information | Delivery Form |
|---|---|---|---|---|---|---|
| AW15245DNR | -40°C ~ 85°C | DFN 1.1mmx0.9mm-6L | L | MSL1 | ROHS+HF | 4500 units/ Tape and Reel |

awinic Confidential

 Copyright © 2022 SHANGHAI AWINIC TECHNOLOGY CO., LTD

## ABSOLUTE MAXIMUM RATINGS[1]

| PARAMETERS | SYMBOL | MIN | TYP | MAX | Unit |
|---|---|---|---|---|---|
| Supply Voltage at pin VCC | VCC | -0.3 | - | 3.6 | V |
| Voltage at pin EN [2] | VEN | -0.3 | - | 3.6 | V |
| Current into pin VCC | ICC | - | - | 30 | mA |
| RF input power [3] | PIN | - | - | 10 | dBm |
| Package thermal resistance | $\theta_{JA}$ | - | 148 | - | ℃/W |
| Junction temperature | $T_J$ | - | - | 150 | ℃ |
| Storage temperature range | $T_{STG}$ | -65 | - | 150 | ℃ |
| Ambient temperature range | $T_{amb}$ | -40 | - | 85 | ℃ |
| Solder temperature(10s) | | - | 260 | - | ℃ |
| **ESD RANGE** | | | | | |
| HBM [4] | | ±3000 | | | V |
| CDM [4] | | ±2000 | | | V |
| **LATCH-UP** | | | | | |
| Test condition: JESD78E | | +IT: +200<br>-IT: -200 | | | mA<br>mA |

***Note1**: Stresses beyond those listed under "absolute maximum ratings" Nov cause permanent damage to the device. These are stress ratings only and functional operation of the device at these or any other conditions beyond those indicated under "recommended operating conditions" is not implied. Exposure to absolute maximum rated conditions for extended periods Nov affect device reliability.*

***Note2:** Warning: due to internal ESD diode protection, the applied DC voltage should not exceed 3.6V in order to avoid excess current.*

***Note3**: The RF input and RF output are AC coupled through internal DC blocking capacitor.*

***Note4**: HBM standard: ESDA/JEDEC JS-001. CDM standard: ESDA/JEDEC JS-002.*

awinic Confidential

 Copyright © 2022 SHANGHAI AWINIC TECHNOLOGY CO., LTD

# ELECTRICAL CHARACTERISTICS

(AW15245DNR EVB[1]; Typical values are at VCC=$V_{EN}$=2.8V and TA=+25°C, f=1575.42MHz, unless otherwise noted)

| PARAMETER | | TEST CONDITION | MIN | TYP | MAX | UNIT |
|---|---|---|---|---|---|---|
| **DC ELECTRICAL CHARACTERISTICS** | | | | | | |
| $V_{CC}$ | Supply Voltage | | 1.5 | - | 3.3 | V |
| $I_{SD}$ | Shut-Down Current | EN=Low | | | 2 | μA |
| $I_{CC}$ | Supply Current | EN=High | | 7.8 | 12 | mA |
| $V_{EN}$ | Digital Input-Logic High | | 1.0 | | 3.3 | V |
| $V_{EN}$ | Digital Input-Logic Low | | | | 0.3 | V |
| **AC ELECTRICAL CHARACTERISTICS** | | | | | | |
| Gp | Power Gain | | 17.5 | 18.9 | 20.5 | dB |
| $RL_{in}$ | Input Return Loss | | 8 | 10 | | dB |
| $RL_{out}$ | Output Return Loss | | 10 | 16 | | dB |
| ISL | Reverse Isolation | | 20 | 27 | | dB |
| NF | Noise Figure[2] | Zs=50 ohm;<br>No jammer | | 0.9 | 1.2 | dB |
| Kf | Stability factor | f=20MHz…10GHz | 1 | | | |
| IP1dB | Inband input<br>1dB-compression point | f=1575.42MHz | -12 | -10.5 | | dBm |
| $IIP3_{ib}$ | Inband input<br>$3^{rd}$-order intercept point | f1=1574.42MHz;<br>f2=1575.42MHz;<br>Pin=-25dBm; | -5 | -2 | | dBm |
| $IIP3_{oob}$ | Out-of-band input<br>$3^{rd}$-order intercept point[3] | f1=1713MHz;<br>f2=1851MHz;<br>Pin_f1=-20dBm;<br>Pin_f2=-65dBm; | -3 | -1 | | dBm |
| IMD3 | $3^{rd}$-order<br>intermodulation distoration | f1=1713MHz;<br>f2=1851MHz;<br>Pin_f1=-20dBm;<br>Pin_f2=-65dBm; | | -83 | | dBm |
| H2-input<br>referred | Out-of-band input<br>$2^{nd}$-ord intercept point | f=787.76MHz<br>Pin=-25dBm | | -63 | | dBm |
| $t_{on}$ | turn-on time | time from $V_{EN}$ ON to 90% of the final gain | | | 2 | μs |
| $t_{off}$ | turn-off time | time from $V_{EN}$ OFF to 10% of the gain | | | 1 | μs |

***Note1**: input matched to 50 ohm using a high quality-factor 10nH inductor.*

***Note2**: PCB losses are subtracted.*

awinic Confidential

 Copyright © 2022 SHANGHAI AWINIC TECHNOLOGY CO., LTD

***Note3**: IP3=P1+(P2+Gain$_{1575MHZ}$-IM3)/2*

(AW15245DNR EVB[1]; Typical values are at VCC=$V_{EN}$=1.8V and TA=+25°C, f=1575.42MHz, unless otherwise noted)

| PARAMETER | | TEST CONDITION | MIN | TYP | MAX | UNIT |
|---|---|---|---|---|---|---|
| **DC ELECTRICAL CHARACTERISTICS** | | | | | | |
| $V_{CC}$ | Supply Voltage | | 1.5 | - | 3.3 | V |
| $I_{SD}$ | Shut-Down Current | EN=Low | | | 2 | μA |
| $I_{CC}$ | Supply Current | EN=High | | 6.7 | 10 | mA |
| $V_{EN}$ | Digital Input-Logic High | | 1.0 | | 3.3 | V |
| $V_{EN}$ | Digital Input-Logic Low | | | | 0.3 | V |
| **AC ELECTRICAL CHARACTERISTICS** | | | | | | |
| Gp | Power Gain | | 17 | 18.4 | 20 | dB |
| $RL_{in}$ | Input Return Loss | | 8 | 9.5 | | dB |
| $RL_{out}$ | Output Return Loss | | 10 | 16 | | dB |
| ISL | Reverse Isolation | | 20 | 27 | | dB |
| NF | Noise Figure[2] | Zs=50 ohm;<br>No jammer | | 0.9 | 1.2 | dB |
| Kf | Stability factor | f=20MHz…10GHz | 1 | | | |
| IP1dB | Inband input<br>1dB-compression point | f=1575.42MHz | -14 | -12.5 | | dBm |
| $IIP3_{ib}$ | Inband input<br>3rd-order intercept point | f1=1574.42MHz;<br>f2=1575.42MHz;<br>Pin=-25dBm; | -5.5 | -3.5 | | dBm |
| $IIP3_{oob}$ | Out-of-band input<br>3rd-order intercept point[3] | f1=1713MHz;<br>f2=1851MHz;<br>Pin_f1=-20dBm;<br>Pin_f2=-65dBm; | -5 | -3 | | dBm |
| IMD3 | 3rd-order<br>intermodulation distoration | f1=1713MHz;<br>f2=1851MHz;<br>Pin_f1=-20dBm;<br>Pin_f2=-65dBm; | | -80 | | dBm |
| H2-input referred | Out-of-band input<br>2nd-ord intercept point | f=787.76MHz<br>Pin=-25dBm | | -63 | | dBm |
| $t_{on}$ | turn-on time | time from $V_{EN}$ ON to 90% of the final gain | | | 2 | μs |
| $t_{off}$ | turn-off time | time from $V_{EN}$ OFF to 10% of the gain | | | 1 | μs |

***Note1**: input matched to 50 ohm using a high quality-factor 10nH inductor.*

***Note2**: PCB losses are subtracted.*

awinic Confidential

 Copyright © 2022 SHANGHAI AWINIC TECHNOLOGY CO., LTD

***Note3***: *IP3=P1+(P2+Gain$_{1575MHZ}$-IM3)/2.*

awinic Confidential

 Copyright © 2022 SHANGHAI AWINIC TECHNOLOGY CO., LTD

(AW15245DNR EVB[1]; Typical values are at VCC=$V_{EN}$=2.8V and TA=+25°C, f=1176.45MHz, unless otherwise noted)

| PARAMETER | | TEST CONDITION | MIN | TYP | MAX | UNIT |
|---|---|---|---|---|---|---|
| **DC ELECTRICAL CHARACTERISTICS** | | | | | | |
| $V_{CC}$ | Supply Voltage | | 1.5 | - | 3.3 | V |
| $I_{SD}$ | Shut-Down Current | EN=Low | | | 2 | μA |
| $I_{CC}$ | Supply Current | EN=High | | 7.8 | 12 | mA |
| $V_{EN}$ | Digital Input-Logic High | | 1.0 | | 3.3 | V |
| $V_{EN}$ | Digital Input-Logic Low | | | | 0.3 | V |
| **AC ELECTRICAL CHARACTERISTICS** | | | | | | |
| Gp | Power Gain | | 17.5 | 18.5 | 20 | dB |
| $RL_{in}$ | Input Return Loss | | 7 | 9 | | dB |
| $RL_{out}$ | Output Return Loss | | 10 | 18 | | dB |
| ISL | Reverse Isolation | | 20 | 29.5 | | dB |
| NF | Noise Figure[2] | Zs=50 ohm;<br>No jammer | | 0.9 | 1.2 | dB |
| Kf | Stability factor | f=20MHz…10GHz | 1 | | | |
| IP1dB | Inband input<br>1dB-compression point | f=1176.45MHz | -15 | -13.1 | | dBm |
| $IIP3_{ib}$ | Inband input<br>$3^{rd}$-order intercept point | f1=1176.45MHz;<br>f2=1177.45MHz;<br>Pin=-30dBm; | -5.6 | -3.6 | | dBm |
| $IIP3_{oob}$ | Out-of-band input<br>$3^{rd}$-order intercept point[3] | f1=1800MHz;<br>f2=2400MHz;<br>Pin_f1=-30dBm; | -9 | -7.3 | | dBm |
| ton | turn-on time | time from VEN ON to 90% of the final gain | | | 2 | μs |
| toff | turn-off time | time from VEN OFF to 10% of the gain | | | 1 | μs |

***Note1**: input matched to 50 ohm using a high quality-factor 18nH inductor. Output matching using 9.1nH inductor and 1.5pF capacitor.*
***Note2**: PCB losses are subtracted.*

awinic Confidential

 Copyright © 2022 SHANGHAI AWINIC TECHNOLOGY CO., LTD

(AW15245DNR EVB[1]; Typical values are at VCC=$V_{EN}$=1.8V and TA=+25°C, f=1176.45MHz, unless otherwise noted)

| PARAMETER | | TEST CONDITION | MIN | TYP | MAX | UNIT |
|---|---|---|---|---|---|---|
| **DC ELECTRICAL CHARACTERISTICS** | | | | | | |
| $V_{CC}$ | Supply Voltage | | 1.5 | - | 3.3 | V |
| $I_{SD}$ | Shut-Down Current | EN=Low | | | 2 | μA |
| $I_{CC}$ | Supply Current | EN=High | | 6.7 | 10 | mA |
| $V_{EN}$ | Digital Input-Logic High | | 1.0 | | 3.3 | V |
| $V_{EN}$ | Digital Input-Logic Low | | | | 0.3 | V |
| **AC ELECTRICAL CHARACTERISTICS** | | | | | | |
| Gp | Power Gain | | 17 | 17.7 | 20 | dB |
| $RL_{in}$ | Input Return Loss | | 6.5 | 8.5 | | dB |
| $RL_{out}$ | Output Return Loss | | 10 | 18 | | dB |
| ISL | Reverse Isolation | | 20 | 29 | | dB |
| NF | Noise Figure[2] | Zs=50 ohm;<br>No jammer | | 0.9 | 1.2 | dB |
| Kf | Stability factor | f=20MHz…10GHz | 1 | | | |
| IP1dB | Inband input<br>1dB-compression point | f=1176.45MHz | -16 | -14.3 | | dBm |
| $IIP3_{ib}$ | Inband input<br>$3^{rd}$-order intercept point | f1=1176.45MHz;<br>f2=1177.45MHz;<br>Pin=-30dBm; | -7.2 | -5.2 | | dBm |
| $IIP3_{oob}$ | Out-of-band input<br>$3^{rd}$-order intercept point[3] | f1=1800MHz;<br>f2=2400MHz;<br>Pin_f1=-30dBm; | -11 | -9 | | dBm |
| ton | turn-on time | time from VEN ON to 90% of the final gain | | | 2 | μs |
| toff | turn-off time | time from VEN OFF to 10% of the gain | | | 1 | μs |

***Note1**: input matched to 50 ohm using a high quality-factor 18nH inductor. Output matching using 9.1nH inductor and 1.5pF capacitor.*

***Note2**: PCB losses are subtracted.*

awinic Confidential

 Copyright © 2022 SHANGHAI AWINIC TECHNOLOGY CO., LTD

# TEST CIRCUITS

## DC Characteristics

The following is the test bench for power supply, pin voltage, supply current, standby current

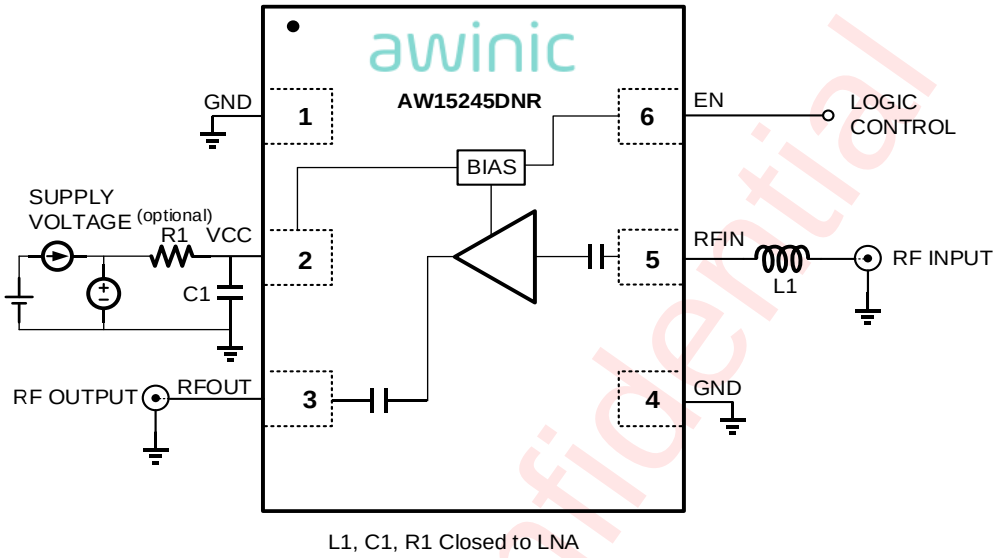


**Figure 4 Test Circuits**

## S Parameter

The following is the test bench for input return loss, output return loss, reverse isolation, forward gain, and 1dB gain compression.

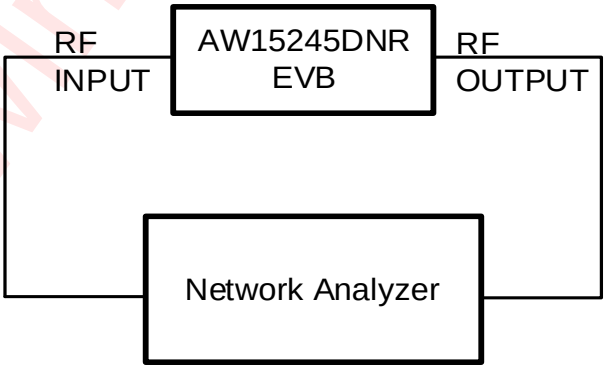


**Figure 5 S Parameter Test Bench**

awinic Confidential

 Copyright © 2022 SHANGHAI AWINIC TECHNOLOGY CO., LTD

## Noise Figure

The following is the test bench for noise figure, power gain.

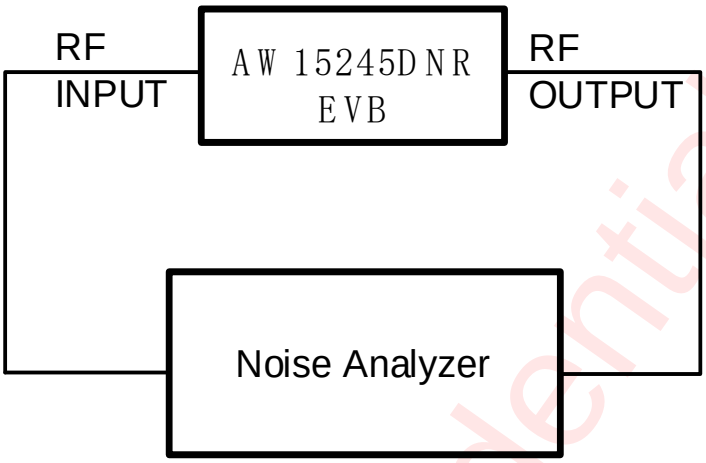


**Figure 6 Noise Figure Test Bench**

## Intermodulation distortion

The following is the test bench for third-order intercept point and second-order intercept point.

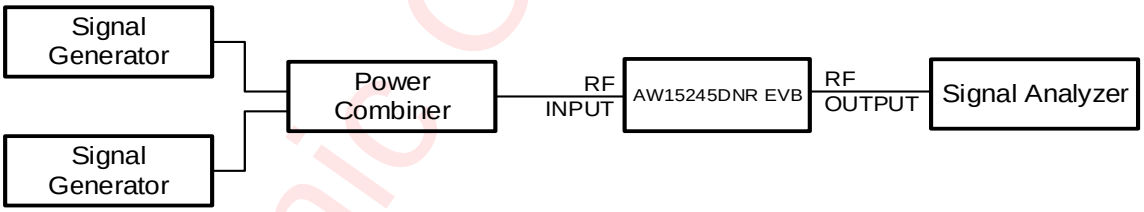


**Figure 7 IIP3 Test Bench**

awinic Confidential

 Copyright © 2022 SHANGHAI AWINIC TECHNOLOGY CO., LTD

# TAPE & REEL DESCRIPTION

REEL DIMENSIONS

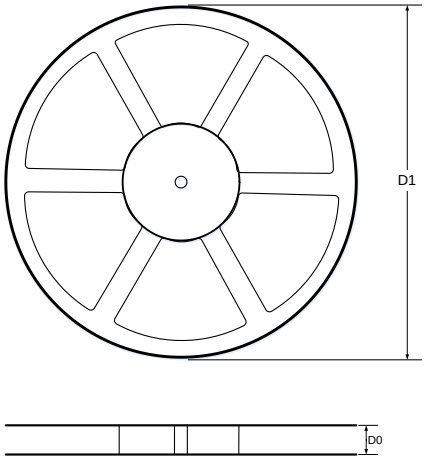


TAPE DIMENSIONS

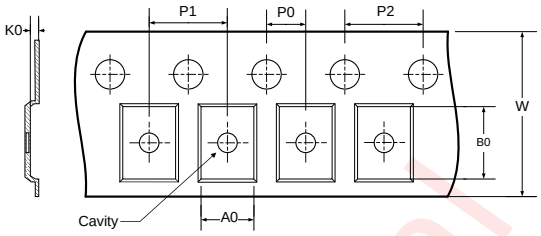


A0：Dimension designed to accommodate the component width
B0：Dimension designed to accommodate the component length
K0：Dimension designed to accommodate the component thickness
W：Overall width of the carrier tape
P0：Pitch between successive cavity centers and sprocket hole
P1：Pitch between successive cavity centers
P2：Pitch between sprocket hole
D1：Reel Diameter
D0：Reel Width

QUADRANT ASSIGNMENTS FOR PIN 1 ORIENTATION IN TAPE

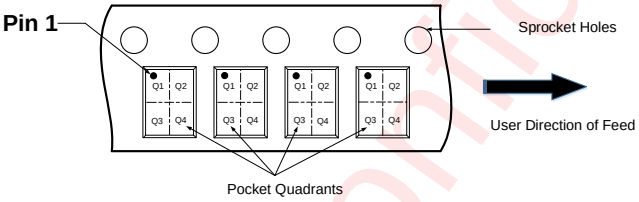


DIMENSIONS AND PIN1 ORIENTATION

| D1 (mm) | D0 (mm) | A0 (mm) | B0 (mm) | K0 (mm) | P0 (mm) | P1 (mm) | P2 (mm) | W (mm) | Pin1 Quadrant |
|---|---|---|---|---|---|---|---|---|---|
| 178 | 8.4 | 1.02 | 1.22 | 0.6 | 2 | 4 | 4 | 8 | Q1 |

**All dimensions are nominal**

**Figure 8 Tape & Reel Description**

awinic confidential

 Copyright © 2022 SHANGHAI AWINIC TECHNOLOGY CO., LTD

# Package Description

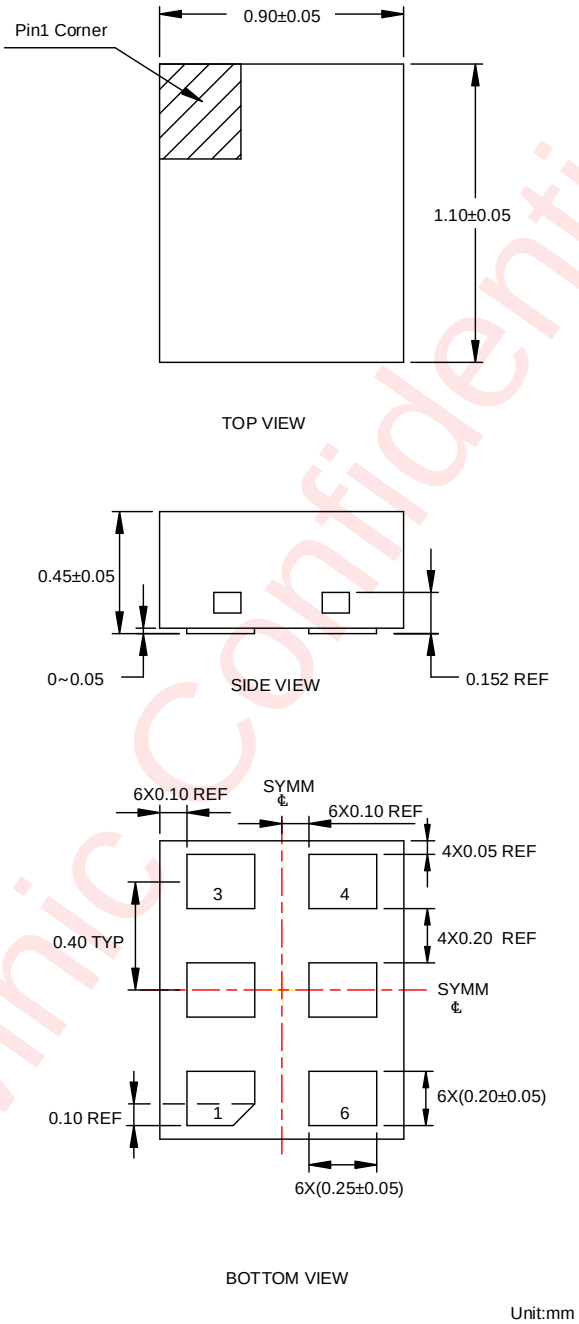


**Figure 9 Package Outline**

awinic Confidential

 Copyright © 2022 SHANGHAI AWINIC TECHNOLOGY CO., LTD

## LAND PATTERN

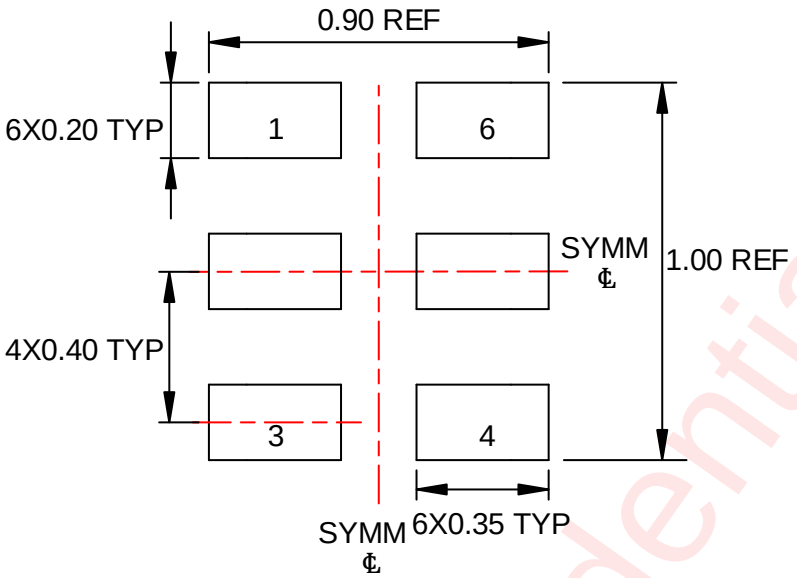


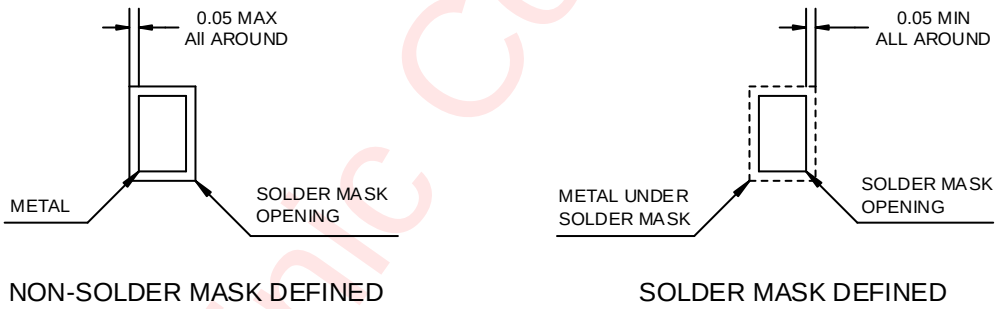


Unit: mm

**Figure 10 Land Pattern**

awinic Confidential

 Copyright © 2022 SHANGHAI AWINIC TECHNOLOGY CO., LTD

# REVISION HISTORY

| Version | Date | Change Record |
|---|---|---|
| V1.0 | Nov. 2020 | Officially Released |
| V1.1 | Nov. 2020 | Added P1dB/ $IIP3_{ib}$ / $IIP3_{oob}$ OF L5 BAND |
| V1.2 | Mar. 2021 | Added H2-input referred |
| V1.3 | Feb. 2022 | 1. The input and output matching inductance of L5 is modified<br>2. The typical value of NF is modified<br>3. Some formats have been modified |

awinic Confidential

 Copyright © 2022 SHANGHAI AWINIC TECHNOLOGY CO., LTD

# DISCLAIMER

Information in this document is believed to be accurate and reliable. However, Shanghai AWINIC Technology Co., Ltd (AWINIC Technology) does not give any representations or warranties, expressed or implied, as to the accuracy or completeness of such information and shall have no liability for the consequences of use of such information.

AWINIC Technology reserves the right to make changes to information published in this document, including without limitation specifications and product descriptions, at any time and without notice. Customers shall obtain the latest relevant information before placing orders and shall verify that such information is current and complete. This document supersedes and replaces all information supplied prior to the publication hereof.

AWINIC Technology products are not designed, authorized or warranted to be suitable for use in medical, military, aircraft, space or life support equipment, nor in applications where failure or malfunction of an AWINIC Technology product can reasonably be expected to result in personal injury, death or severe property or environmental damage. AWINIC Technology accepts no liability for inclusion and/or use of AWINIC Technology products in such equipment or applications and therefore such inclusion and/or use is at the customer's own risk.

Applications that are described herein for any of these products are for illustrative purposes only. AWINIC Technology makes no representation or warranty that such applications will be suitable for the specified use without further testing or modification.
All products are sold subject to the general terms and conditions of commercial sale supplied at the time of order acknowledgement.

Nothing in this document Nov be interpreted or construed as an offer to sell products that is open for acceptance or the grant, conveyance or implication of any license under any copyrights, patents or other industrial or intellectual property rights.

Reproduction of AWINIC information in AWINIC data books or data sheets is permissible only if reproduction is without alteration and is accompanied by all associated warranties, conditions, limitations, and notices. AWINIC is not responsible or liable for such altered documentation. Information of third parties Nov be subject to additional restrictions.

Resale of AWINIC components or services with statements different from or beyond the parameters stated by AWINIC for that component or service voids all express and any implied warranties for the associated AWINIC component or service and is an unfair and deceptive business practice. AWINIC is not responsible or liable for any such statements.

awinic Confidential

 Copyright © 2022 SHANGHAI AWINIC TECHNOLOGY CO., LTD